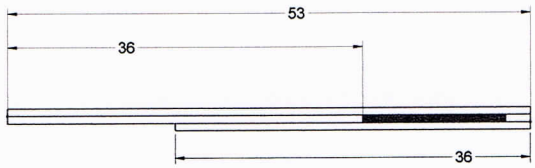

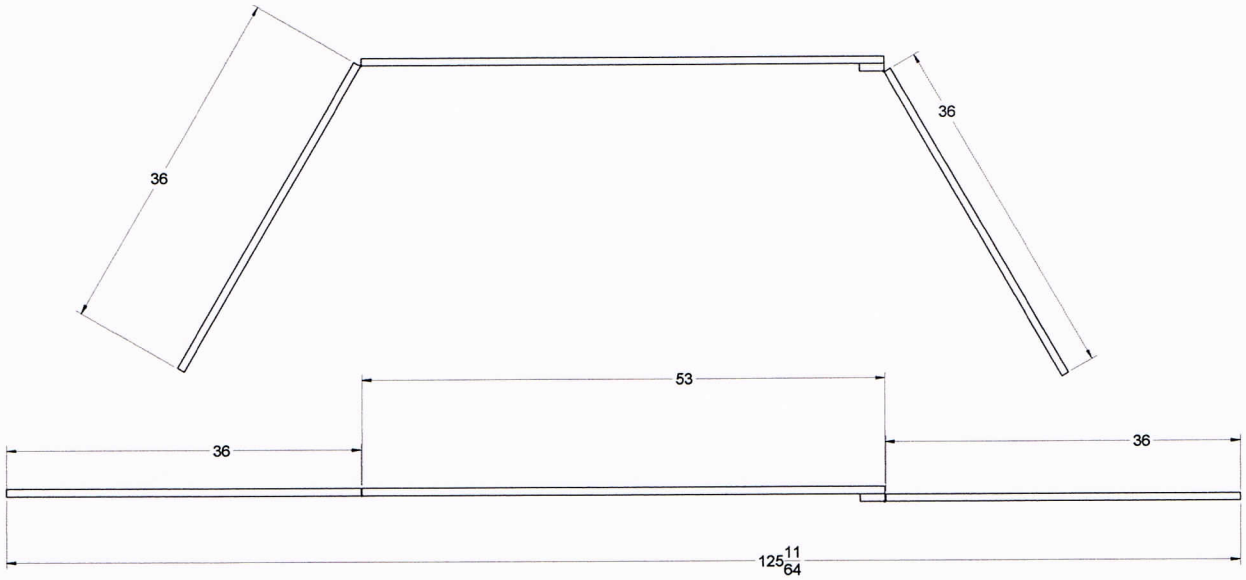

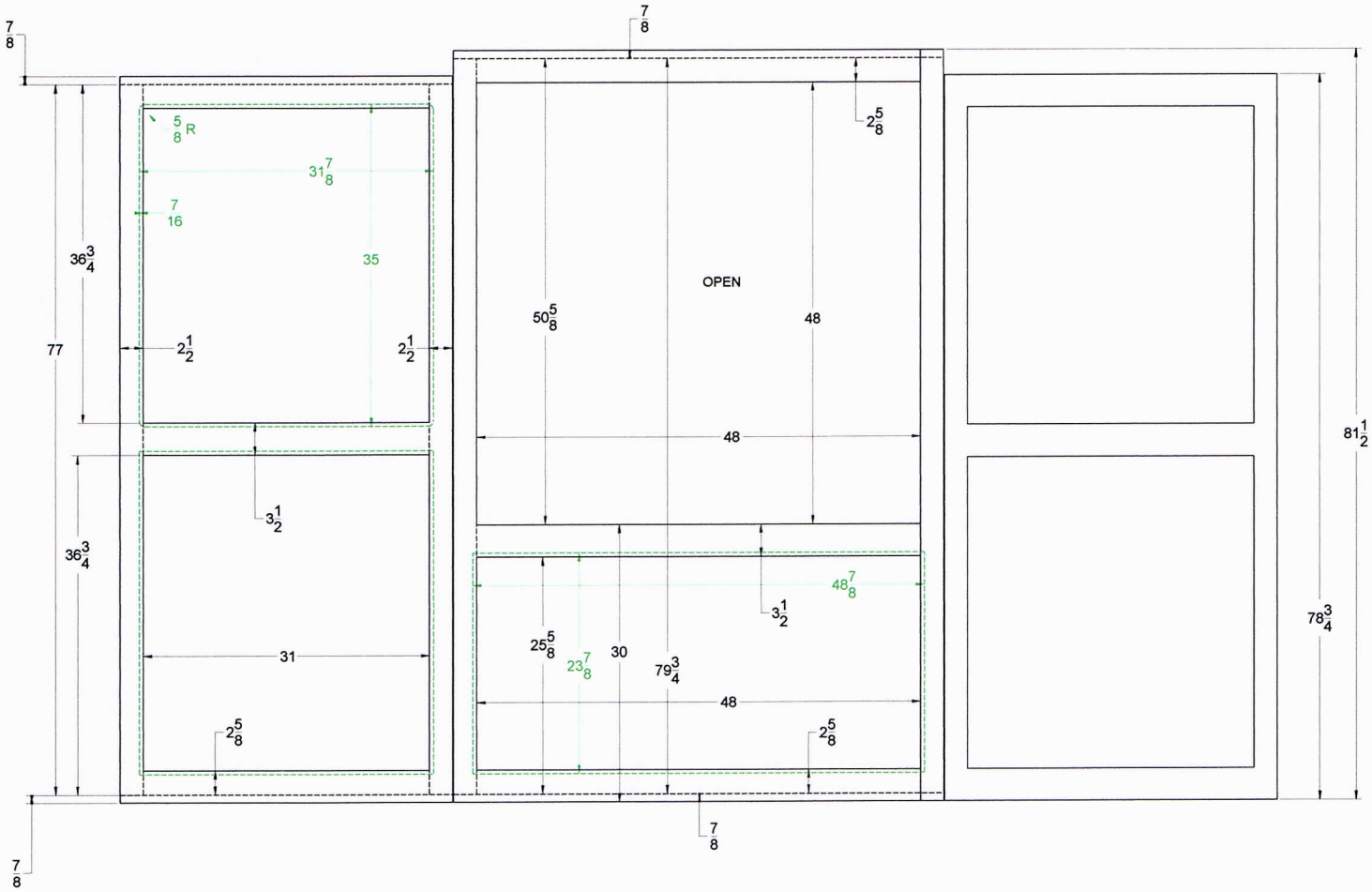

DeltaCad DEMO